# ■ MODEL : NEVM

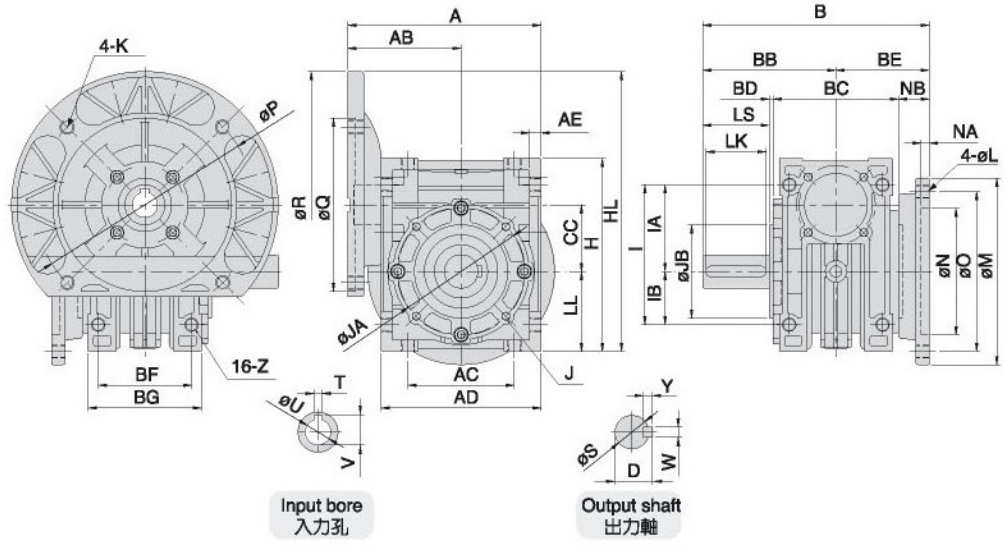


## 尺寸表 Dimension

單位：m/m

| 型號 MODEL | 減速比 RATIO | 馬力 HP | A | AB | AC | AD | AE | B | BE | NB | BB | BC | BD | BF | BG | CC | LL | H | HL | I | IA | IB | Z | 馬達盤 MOTOR FLANGE P | Q | R | K |
|---|---|---|---|---|---|---|---|---|---|---|---|---|---|---|---|---|---|---|---|---|---|---|---|---|---|---|---|
| 30 | 5~60 | 40,60W | 98 | 58 | 55 | 80 | 6 | 127.5 | 60 | 30 | 67.5 | 60 | 2 | 45 | 58 | 30 | 40 | 98 | 115 | 72 | 45 | 27 | M6 | 104 | 83 | 90 | M6 |
| | 5~40 | 90W | | | | | | | | | | | | | | | | | 115 | | | | | 104 | 83 | 90 | M6 |
| | 5~30 | 1/4 | | | | | | | | | | | | | | | | | 140 | | | | | 115 | 95 | 140 | M8 |
| 40 | 5~60 | 1/4 | 124 | 73 | 70 | 102 | 7.5 | 155 | 70 | 30 | 85 | 80 | 2 | 60 | 72 | 40 | 50 | 122 | 170 | 90 | 55 | 35 | M8 | 115 | 95 | 140 | M8 |
| | 5~30 | 1/2 | | | | | | | | | | | | | | | | | | | | | | 130 | 110 | 160 | M8 |
| 50 | 5~60 | 1/4 | 141 | 81 | 80 | 120 | 8.5 | 180 | 80 | 33 | 100 | 94 | 3 | 70 | 85 | 50 | 60 | 145 | 190 | 105 | 65 | 40 | M10 | 130 | 110 | 160 | M8 |
| | 5~50 | 1/2 | 141 | 81 | | | | | | | | | | | | | | | 190 | | | | | 130 | 110 | 160 | M8 |
| | 5~30 | 1 | 148 | 88 | | | | | | | | | | | | | | | 210 | | | | | 165 | 130 | 200 | M10 |
| 60 | 5~60 | 1/2 | 167 | 94 | 100 | 146 | 10 | 205 | 100 | 49 | 105 | 102 | 3 | 85 | 103 | 60 | 75 | 180 | 215 | 136 | 83 | 53 | M10 | 130 | 110 | 160 | M8 |
| | 5~50 | 1 | 174 | 101 | | | | | | | | | | | | | | | 235 | | | | | 165 | 130 | 200 | M10 |
| | 5~15 | 2 | 174 | 101 | | | | | | | | | | | | | | | 235 | | | | | 165 | 130 | 200 | M10 |
| 70 | 5~60 | 1/2 | 196 | 111 | 120 | 170 | 12 | 225 | 100 | 41 | 125 | 118 | 3 | 90 | 110 | 70 | 85 | 200 | 235 | 150 | 90 | 60 | M10 | 130 | 110 | 160 | M8 |
| | 5~60 | 1 | 198 | 113 | | | | | | | | | | | | | | | 255 | | | | | 165 | 130 | 200 | M10 |
| | 5~40 | 2 | 198 | 113 | | | | | | | | | | | | | | | 255 | | | | | 165 | 130 | 200 | M10 |

| 型號 MODEL | 減速比 RATIO | 馬力 HP | 入力孔 INPUT BORE V | T | U | 出力法蘭及出力軸 OUTPUT FLANGE & OUTPUT SHAFT N | NA | O | M | L | LS | S | D | WxYxLK | JA | JB | J | 重量 Weight(KG) |
|---|---|---|---|---|---|---|---|---|---|---|---|---|---|---|---|---|---|---|
| 30 | 5~60 | 40,60W | 12.7 | 4 | 11 | 70 | 5 | 85 | 100 | M6 | 35 | 16 | 18 | 5x5x30 | 65 | 55 | 8-M6 | 1.56 |
| | 5~40 | 90W | | | | | | | | | | | | | | | | |
| | 5~30 | 1/4 | | | | | | | | | | | | | | | | |
| 40 | 5~60 | 1/4 | 12.7 | 4 | 11 | 80 | 6 | 100 | 120 | M8 | 40 | 20 | 22.5 | 6x6x35 | 77 | 60 | 12-M6 | 3.1 |
| | 5~30 | 1/2 | 16.3 | 5 | 14 | | | | | | | | | | | | | |
| 50 | 5~60 | 1/4 | 12.7 | 4 | 11 | 95 | 6 | 120 | 140 | M10 | 50 | 25 | 28 | 8x7x45 | 95 | 70 | 12-M6 | 4.27 |
| | 5~50 | 1/2 | 16.3 | 5 | 14 | | | | | | | | | | | | | |
| | 5~30 | 1 | 21.8 | 6 | 19 | | | | | | | | | | | | | |
| 60 | 5~60 | 1/2 | 16.3 | 5 | 14 | 130 | 7 | 160 | 180 | M10 | 50 | 25 | 28 | 8x7x45 | 120 | 80 | 12-M8 | 7.1 |
| | 5~50 | 1 | 21.8 | 6 | 19 | | | | | | | | | | | | | |
| | 5~15 | 2 | 27.3 | 8 | 24 | | | | | | | | | | | | | |
| 70 | 5~60 | 1/2 | 16.3 | 5 | 14 | 150 | 7 | 185 | 210 | M12 | 60 | 30 | 33 | 8x7x55 | 140 | 90 | 12-M10 | 11.7 |
| | 5~60 | 1 | 21.8 | 6 | 19 | | | | | | | | | | | | | |
| | 5~40 | 2 | 27.3 | 8 | 24 | | | | | | | | | | | | | |